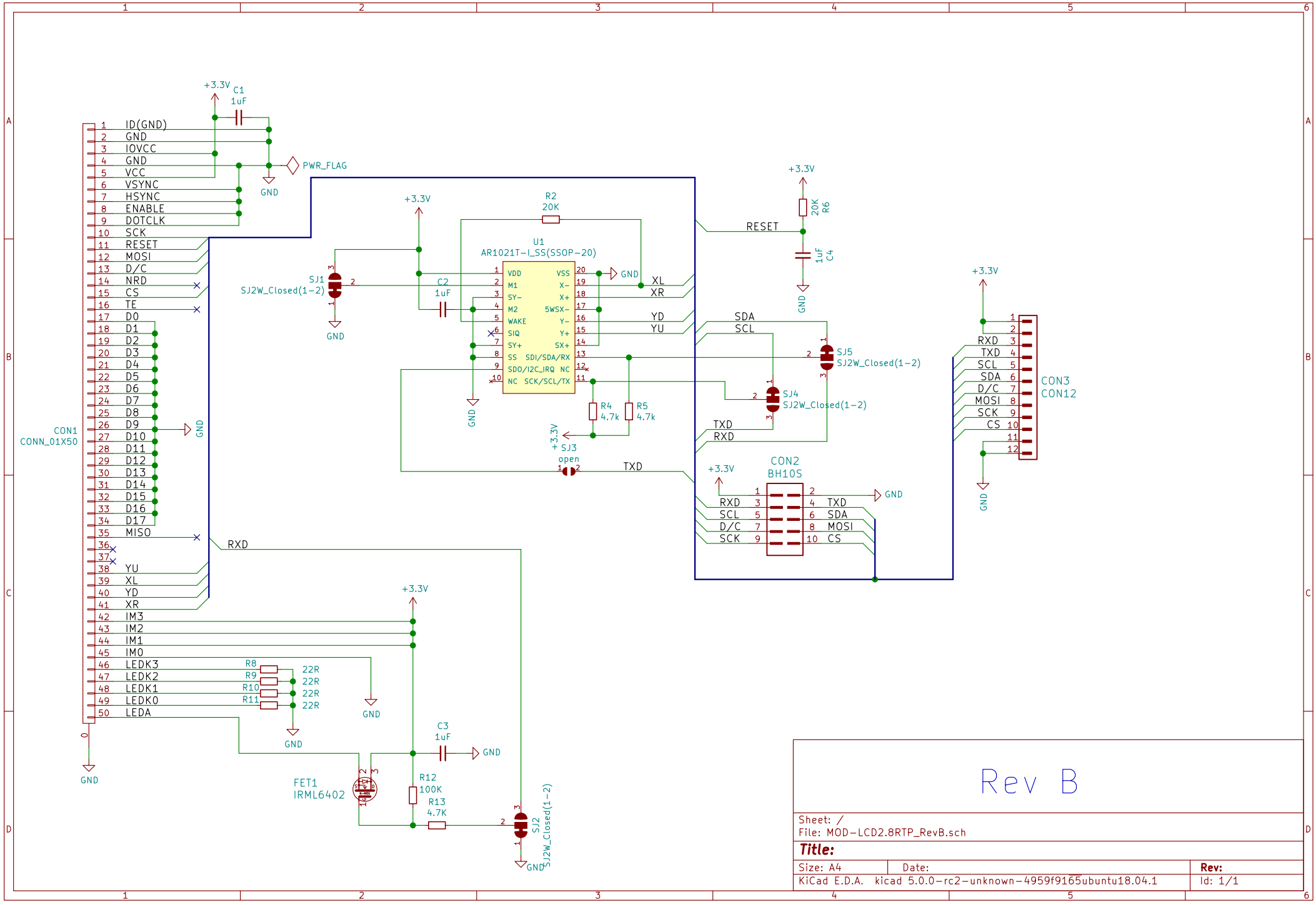
CON1
CONN_01X50
ID(GND)
GND
IOVCC
VCC
VSYNC
HSYNC
ENABLE
DOTCLK
SCK
RESET
MOSI
D/C
NRD
CS
TE
D0
D1
D2
D3
D4
D5
D6
D7
D8
D9
D10
D11
D12
D13
D14
D15
D16
D17
MISO
YU
XL
YD
XR
IM3
IM2
IM1
IM0
LEDK3
LEDK2
LEDK1
LEDK0
LEDA
+3.3V
C1
1uF
PWR_FLAG
R2
20K
U1
AR1021T-I_SS(SSOP-20)
VDD
M1
SY-
M2
WAKE
SIQ
SY+
SS
SDO/I2C_IRQ
NC
VSS
X-
X+
5WSX-
Y-
Y+
SX+
SDI/SDA/RX
SCK/SCL/TX
SJ1
SJ2W_Closed(1-2)
C2
1uF
R4
4.7k
R5
4.7k
SJ3
open
R6
20K
C4
1uF
SJ5
SJ4
CON2
BH10S
CON3
CON12
R8
R9
R10
R11
22R
C3
1uF
FET1
IRML6402
R12
100K
R13
4.7K
SJ2
Rev B
Sheet: /
File: MOD-LCD2.8RTP_RevB.sch
Title:
Size: A4
Date:
Rev:
KiCad E.D.A. kicad 5.0.0-rc2-unknown-4959f9165ubuntu18.04.1
Id: 1/1